mr.steam®

TECHNICAL SPECIFICATIONS

iTempoPlus® Controls

iTempoPlus controls flush mount in the steam/shower enclosure through a 2 5/8" wide x 3 7/8" high hole. iTempo controls can also be surface mounted.

BOX CONTENTS:
- iTempoPlus
- Steamhead
- Control Cable (30 ft.)
- Tube of Silicone Sealant
- Owner's Manual

iTempoPlus Controls Feature:

- Solid brass decorative cover with choice of square or round styles in designer finishes
- Digital display
- Programmable temperature
- AromaSteam Steamhead in matching finish and shape
- Compatibility with SteamLinx
- Soft touch keypad
- Low voltage operation
- Programmable steam bath duration
- Clock
- ON/OFF control for AromaSteam and Chroma72
- Two programmable presets

Dimensions for round and square controls:

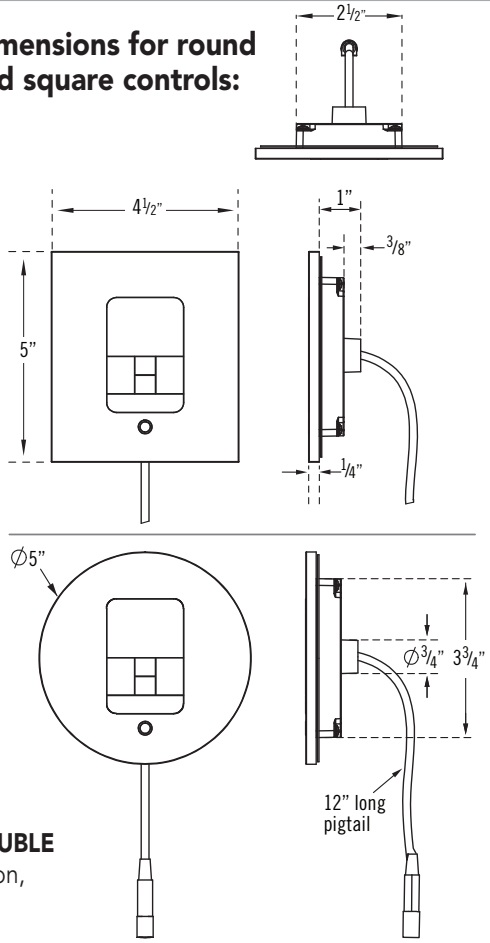

The iTempoPlus controls are designed to be installed inside or outside the steam room but is primarily installed inside the steam room. If the control is installed inside the steam room the control must be located:

- 4-5 feet above the floor
- in a location representative of the desired steam bathing temperatures. Do not locate the control above or near the Steamhead or direct steam emissions.
- on a vertical wall

The control cable length is 30 feet. Insure that the control and/or steam generator are located accordingly.

An optional 60 ft. cable is available if required, PN 103990-60.

If the control is installed outside the steam room a Remote Temperature Probe Part Number MSTS must be installed inside the steam room.

FOR ILLUSTRATIVE PURPOSES ONLY. IMPORTANT NOTE: FOR SAFE AND TROUBLE FREE INSTALLATION visit mrsteam.com before installation to download the Installation, Operation and Maintenance Manual or refer to the manual provided with the unit.

MODEL	SHAPE	FINISH	PROJECT INFORMATION
MS iTempoPlus	☐ RD Round ☐ SQ Square	☐ BB - Brushed Bronze	Location:
		☐ BN - Brushed Nickel	Architect:
		☐ ORB - Oil Rubbed Bronze	Engineer:
		☐ PB - Polished Brass	Contractor:
		☐ PC - Polished Chrome	Submitted By:
		☐ PN - Polished Nickel	Date:
		☐ SB - Satin Brass	Notes:
		☐ BK - Black Fascia	
		☐ WH - White Fascia	
		☐ MB - Matte Black	
		☐ RAW - Custom Plating	

mr.steam® Sussman-Automatic Corp® hello@mrsteam.com www.mrsteam.com
43-20 34th Street, Long Island City, NY 11101 tel: 1 800 76 STEAM fax: 718 472 3256
9410 S. La Cienega Blvd. Inglewood CA 90301 tel: 1 800 72 STEAM fax: 310 216 2944